Degree of protection: IP65

Hoods, side entry

Thread	Designation	Order No.
M25	H24B-SE-2L/SC-M25	111 024 541 1003
M32	H24B-SE-2L/SC-M32	111 024 541 1004
PG21	H24B-SE-2L/SC-PG21	111 024 541 1011

Please refer to page 15-02 for choosing proper model of lock.

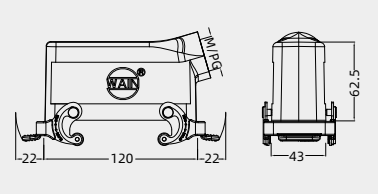

Hoods, side entry, high construction

Thread	Designation	Order No.
M32	W24B-SEH-2L/SC-M32	111 124 541 5001
M40	W24B-SEH-2L/SC-M40	111 124 541 5002
PG21	W24B-SEH-2L/SC-PG21	111 124 541 5003
PG29	W24B-SEH-2L/SC-PG29	111 124 541 5004
	with sleeve	
M32	W24B-SEH-2L/SC-M32 WS	111 124 541 5005
PG21	W24B-SEH-2L/SC-PG21 WS	111 124 541 5011
PG29	W24B-SEH-2L/SC-PG29 WS	111 124 541 5012

Please refer to page 15-02 for choosing proper model of lock.

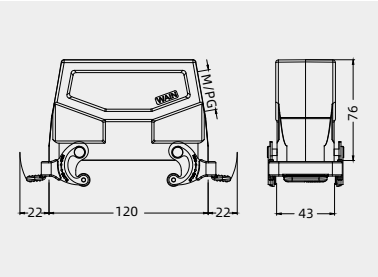

Hoods, top entry

Thread	Designation	Order No.
M25	H24B-TE-2L/SC-M25	111 024 441 1003
M32	H24B-TE-2L/SC-M32	111 024 441 1004
PG21	H24B-TE-2L/SC-PG21	111 024 441 1011
PG29	H24B-TE-2L/SC-PG29	111 024 441 1012

Please refer to page 15-02 for choosing proper model of lock.

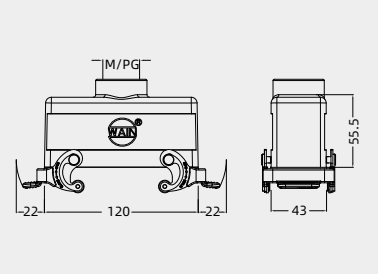

Hoods, top entry, high construction

Thread	Designation	Order No.
M32	W24B-TEH-2L/SC-M32	111 124 441 5001
M40	W24B-TEH-2L/SC-M40	111 124 441 5002
PG21	W24B-TEH-2L/SC-PG21	111 124 441 5003
PG29	W24B-TEH-2L/SC-PG29	111 124 441 5004
	with sleeve	
M32	W24B-TEH-2L/SC-M32 WS	111 124 441 5006
PG21	W24B-TEH-2L/SC-PG21 WS	111 124 441 5011
PG29	W24B-TEH-2L/SC-PG29 WS	111 124 441 5012

Please refer to page 15-02 for choosing proper model of lock.

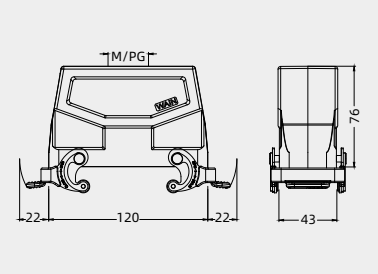

Bulkhead mounted housings
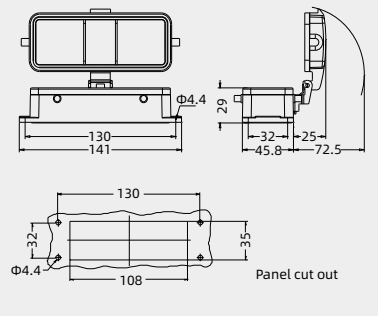
Thread	Designation	Order No.
---	H24B-BK-4B	111 024 330 1001
	with plastic cover	
---	H24B-BK-4B-CV	111 024 370 1001
	with metal cover	
---	H24B-BK-4B-MCV	111 024 370 1101